IC-2KLPS

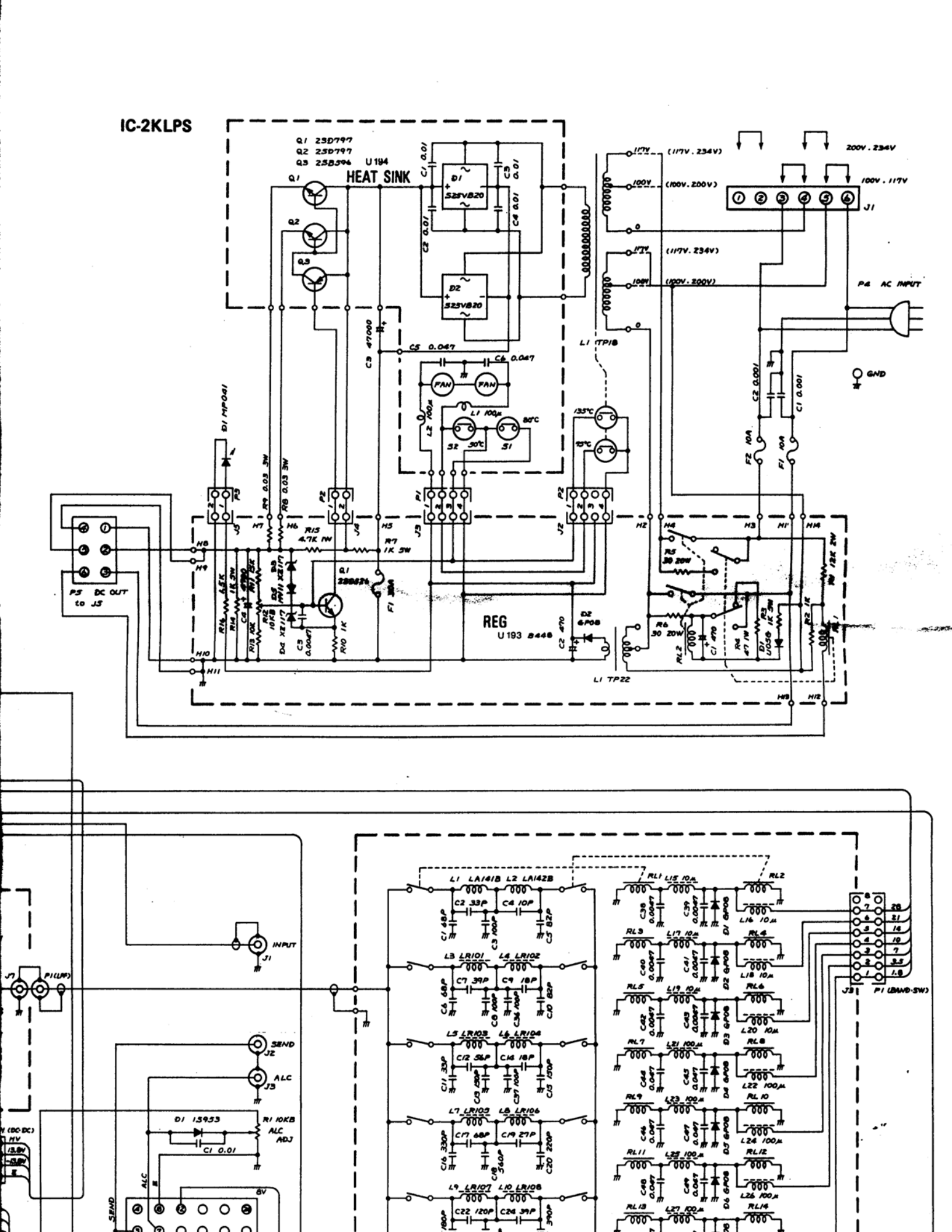

Q1 2SD797
Q2 2SD797
Q3 2SB596
U194
HEAT SINK
D1 S25VB20
D2 S25VB20
C1 0.01
C2 0.01
C3 0.01
C4 0.01
C5 0.047
C6 0.047
C3 47000
FAN
L1 100μ
L2 100μ
S2 50°C
S1 80°C
D1 MP041
R9 0.03 3W
R8 0.03 3W
R15 4.7K 1W
R7 1K 5W
Q1 2SB526
F1 30A
R16 6.5K
R14 1K 3W
R13 10K
R12 10KB
D4 XZ117
C3 0.0047
R10 1K
P5 DC OUT to J5
REG
U193 B448
D2 GP08
C2 470
L1 TP22
L1 TP18
135°C
75°C
117V (117V. 234V)
100V (100V. 200V)
200V. 234V
100V. 117V
J1
P4 AC INPUT
GND
C2 0.001
C1 0.001
F2 10A
F1 10A
R5 30 20W
R6 30 20W
RL2
C1 470
R4 47 1W
D1 U05G
R3 1K 5W
R2 1K
R1 12K 2W
INPUT
J1
J7
P1(LPF)
SEND
J2
ALC
J3
D1 1S953
R1 10KB ALC ADJ
C1 0.01
8V
L1 LA141B
L2 LA142B
C2 33P
C4 10P
C1 68P
C3 100P
C5 82P
L3 LR101
L4 LR102
C7 39P
C9 18P
C6 68P
C8 100P
C36 100P
C10 82P
L5 LR103
L6 LR104
C12 56P
C14 18P
C11 33P
C13 150P
C37 100P
C15 150P
L7 LR105
L8 LR106
C17 68P
C19 27P
C16 330P
C18 560P
C20 220P
L9 LR107
L10 LR108
C22 120P
C24 39P
RL1
L15 10μ
RL2
L16 10μ
RL3
L17 10μ
RL4
L18 10μ
RL5
L19 10μ
RL6
L20 10μ
RL7
L21 100μ
RL8
L22 100μ
RL9
L23 100μ
RL10
L24 100μ
RL11
L25 100μ
RL12
L26 100μ
RL13
L27 100μ
RL14
J3
P1 (BAND-SW)